Extender

SPECIFICATIONS

Model	EX010-M12-2
Material	Aluminum
Surface finishing	Black alumite (Pearskin finish)
Mount	Lens: M12 P=0.5 / Camera: M12 P=0.5
Weight	Approx. 2.1g

※Design and specifications are subject to change without notice.
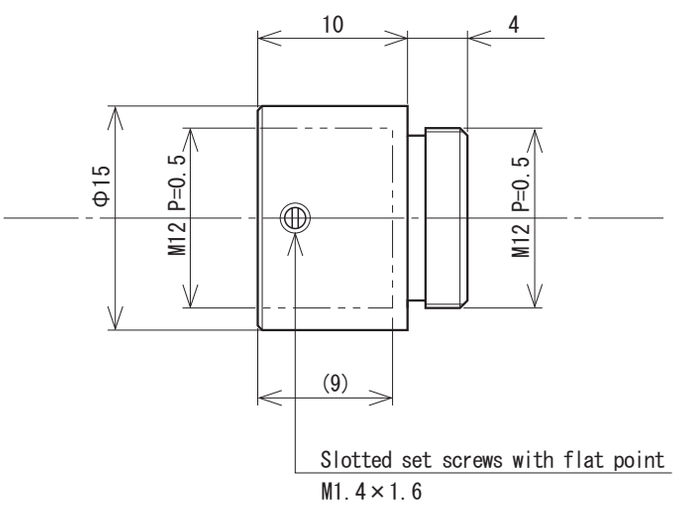
DIMENSIONS (mm)