WAT-1100MBD (G3.6) 1/3.2" High Sensitivity Miniature Board Day/Night Camera

Day/Night board camera for general surveillance

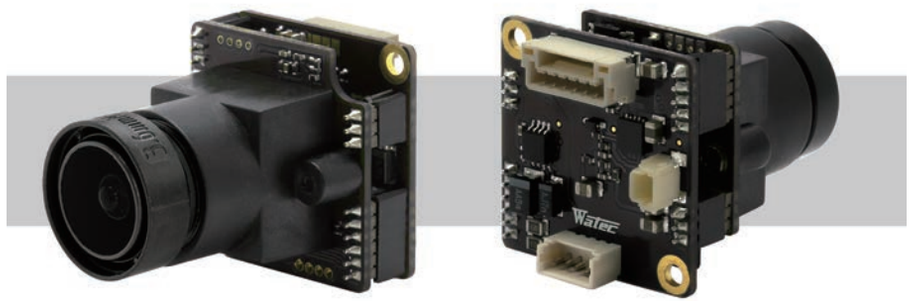

***NO CE & FCC**

Key features

- High sensitivity min. illumination 0.005 lx F2.0 (AGC ON=54dB, Shutter=OFF)
- Ultra-compact design only 23 x 23 x 35 mm
- Wide dynamic range, ICR Mechaless Day/Night function
- Advanced setting available by OSD (On Screen Display) through an optional remote control
- A dual-band pass filter allows the ability to view a scene with 850nm IR illumination at night

  *Glass lenses and pinhole lens are not interchangeable

Dimensions

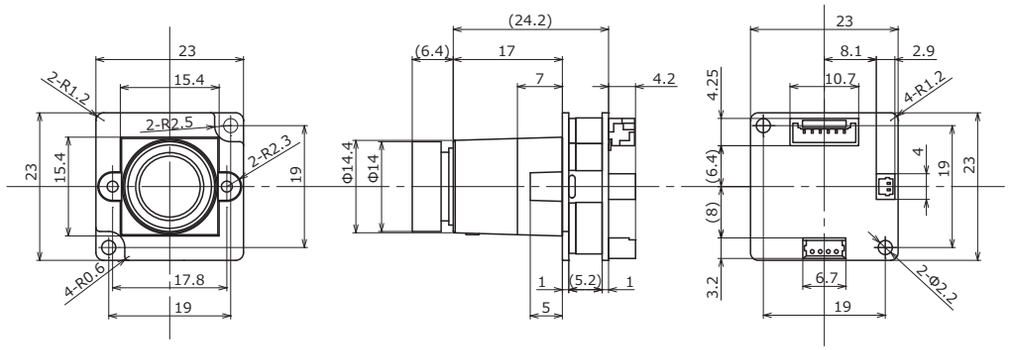

Specifications

Video standard		NTSC	PAL
Pick-up element		1/3.2 inch BSI CMOS image sensor	
Number of effective pixels		1280(H) × 960(V)	1280(H) × 924(V)
Unit cell size		3.5μm(H) × 3.5μm(V)	
Imaging system		RGB+W array mosaic filters on chip	
Synchronizing system		Internal	
Scanning system		Progressive	
Video output		Composite: 1.0 V(p-p) 75Ω (Unbalanced)	
Resolution (H)		More than 750TVL (Center)	
Minimum illumination		0.005 lx F2.0 (AGC ON=54dB, Shutter=OFF)	
S/N		More than 55dB (AGC OFF=0dB, γ=1.0)	
Function settings		OSD : Remote controller	
AE mode	Fixed	1/60 sec.	1/50 sec.
		1/100, 1/120, 1/125, 1/250, 1/500, 1/1000, 1/2000,	
		1/4000, 1/8000, 1/10000, 1/20000, 1/50000, 1/100000 sec.	
	EI	1/60 - 1/100000 sec.	1/50 - 1/100000 sec.
White balance		ATW, AWB, PWB, MWB, PRESET (5100K, 6300K)	
AGC	ON	0 - 54dB	
	OFF	0dB	
MGC		0 - 54dB (6dB step)	
Day/Night		ICR mechaless Auto, Manual	
Gamma characteristics		γ≒0.45	
Video level		Adjustable	
Noise reduction		2DNR OFF/ON Level adjustable	
Wide dynamic range		WDR OFF/ON Level adjustable, D-WDR OFF/ON Level adjustable	
Lens iris		DC	
Back light compensation		BLC, HSBLC	
White blemish correction		—	
Sharpness		Level adjustable	
Defog		OFF/ON Level adjustable	
Digital zoom		—	
Privacy mask		16 masks	
Mirror image		OFF, V-FLIP, H-FLIP, HV-FLIP	
Freeze		—	
Motion detection		—	
Neg.image		—	
Interface		4P connector (Composite Video, Power in), 2P connector (IR light ctl), Remote control(RC-01)	
Power supply		DC+5V - 12V	
Power consumption		0.6W/120mA (DC+5V), 0.72W/60mA (DC+12V)	
Operating temperature		-10 - +50℃	
Storage temperature		-30 - +70℃	
Operating / Storage humidity		95% RH or less (Without condensation)	
Lens mount		M12 P=0.5	
Standard lens		M3620BC-12 (f3.6 F2.0)	
Weight		Approx. 13g	
Accessories		4P cable, 2P cable	

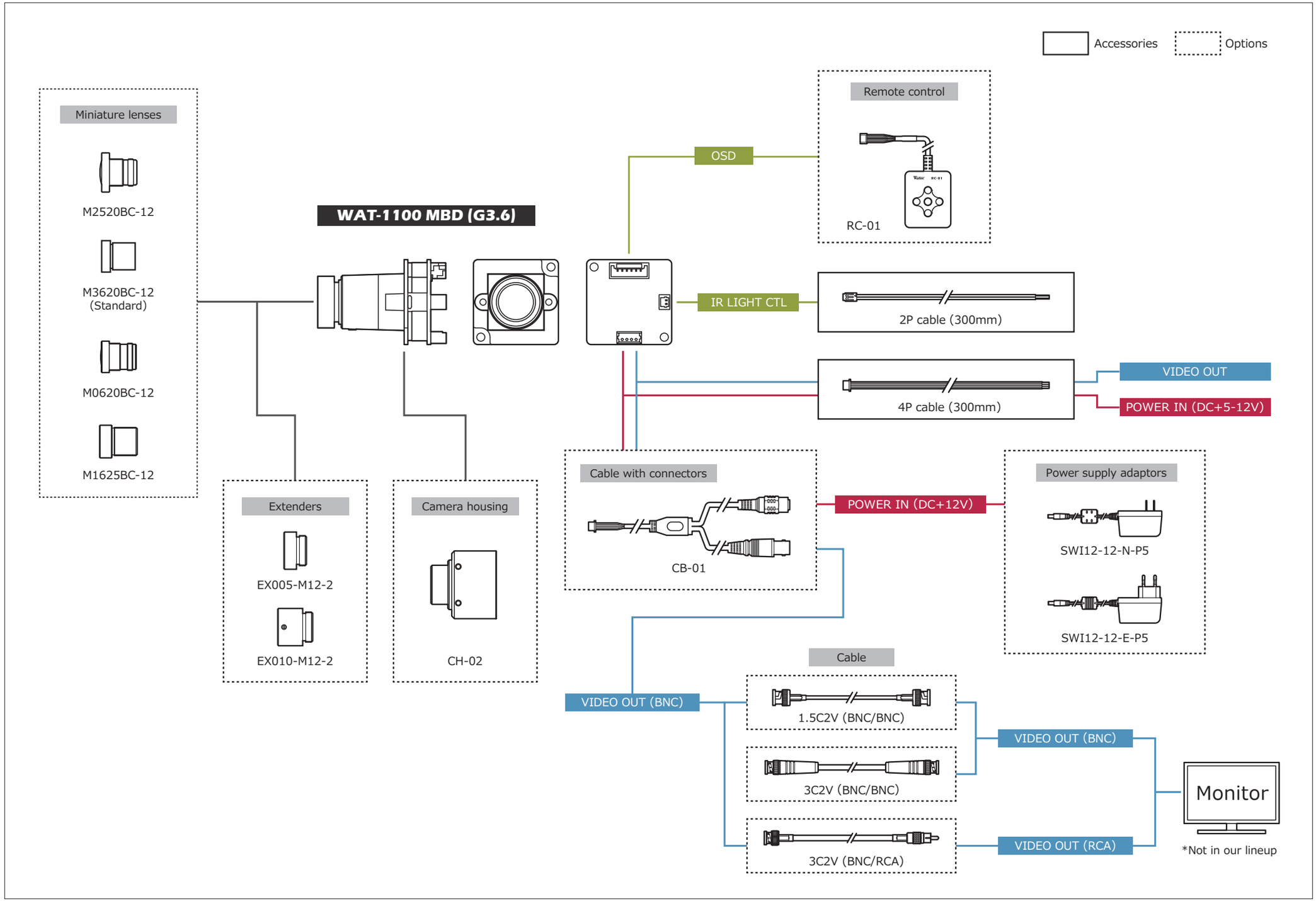
Accessories
Options
Miniature lenses
M2520BC-12
M3620BC-12
(Standard)
M0620BC-12
M1625BC-12
WAT-1100 MBD (G3.6)
OSD
Remote control
RC-01
IR LIGHT CTL
2P cable (300mm)
4P cable (300mm)
VIDEO OUT
POWER IN (DC+5-12V)
Extenders
EX005-M12-2
EX010-M12-2
Camera housing
CH-02
Cable with connectors
CB-01
POWER IN (DC+12V)
Power supply adaptors
SWI12-12-N-P5
SWI12-12-E-P5
Cable
VIDEO OUT (BNC)
1.5C2V (BNC/BNC)
3C2V (BNC/BNC)
3C2V (BNC/RCA)
VIDEO OUT (BNC)
VIDEO OUT (RCA)
Monitor
*Not in our lineup